CLASS No.	TITLE SLIM TYPE SLIDE POTENTIOMETER

ELECTRICAL

1. Overall resistance : 10kΩ±20%
2. Minimum resistance : Across term.1-2 30Ω max. Across term.2-3 50Ω max.
3. Taper : B Taper
4. Rated power : 0.1 Watts
5. Rated voltage : Rated voltage = $\sqrt{P \cdot R}$ (V)
   P : rated power (W)
   R : nominal overall resistance (Ω)
   When the rated voltage exceeds the maximum operating voltage the maximum operating voltage shall be the rated voltage.
   Maximum operating voltage : A.C.200 V D.C.10 V
6. Dielectric test : Units shall be designed to withstand 300 volts A.C. 50 Hz R.M.S. between front section and rear section terminals for a period of one minute without damage or arcing.
7. Insulation resistance : Greater than 100 megohms between front section and rear section terminals when tested by a 250 volts D.C. insulation resistance meter.
8. Sliding life test : 10,000 cycles.
9. Tracking error : 2dB at the point 50% travel.

*Lever shall be operable with speed of 20 mm per sec. without noise by static electricity.

SYMB	DATE	APPD	CHKD	DSGD

ALPSALPINE CO.,LTD.

APPD.	CHKD.	DSGD.	TITLE
'96-04-01	'96-04-01	'96-04-01	SPECIFICATIONS
Y.YOSHIOKA	H.ITO	H.KIMURA	DOCUMENT NO. RS30H121A00B (1/3)

CLASS No.	TITLE SLIM TYPE SLIDE POTENTIOMETER

MECHANICAL

1. Travel : Specified in particular Figure.
2. Operating force : $0.6^{+0.5}_{-0.4}$N (Note 1)
   (Note 1) Measuring temperature : 5°C - 35°C
   Measuring point : 2mm from the top of the lever.
   Sliding speed : 20 mm per sec.
3. Stop strength :
   30N at a position 2mm from the base of the lever.
4. Lever lateral play :
   When 2.5N is applied in a sidewise direction to a point 2mm from the base of the lever, the bothside movement of the lever, shall be less than 1.6mm.
5. Lever strength :
   To be resistant with 30N static force of pull or push applied to lever in thrust direction for 10 seconds without damage.
6. Resistance to soldering heat : 3 sec. max. at 300°C
7. Lever inclination : Measure a sample that is inserted firmly in a P.C.B

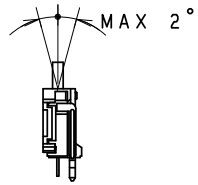

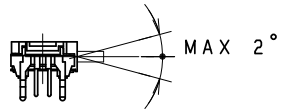

SYMB	DATE	APPD	CHKD	DSGD

ALPSALPINE CO.,LTD.

APPD.	CHKD.	DSGD.	TITLE
'96-04-01	'96-04-01	'96-04-01	SPECIFICATIONS
Y.YOSHIOKA	H.ITO	H.KIMURA	DOCUMENT NO. RS30H121A00B (2/3)

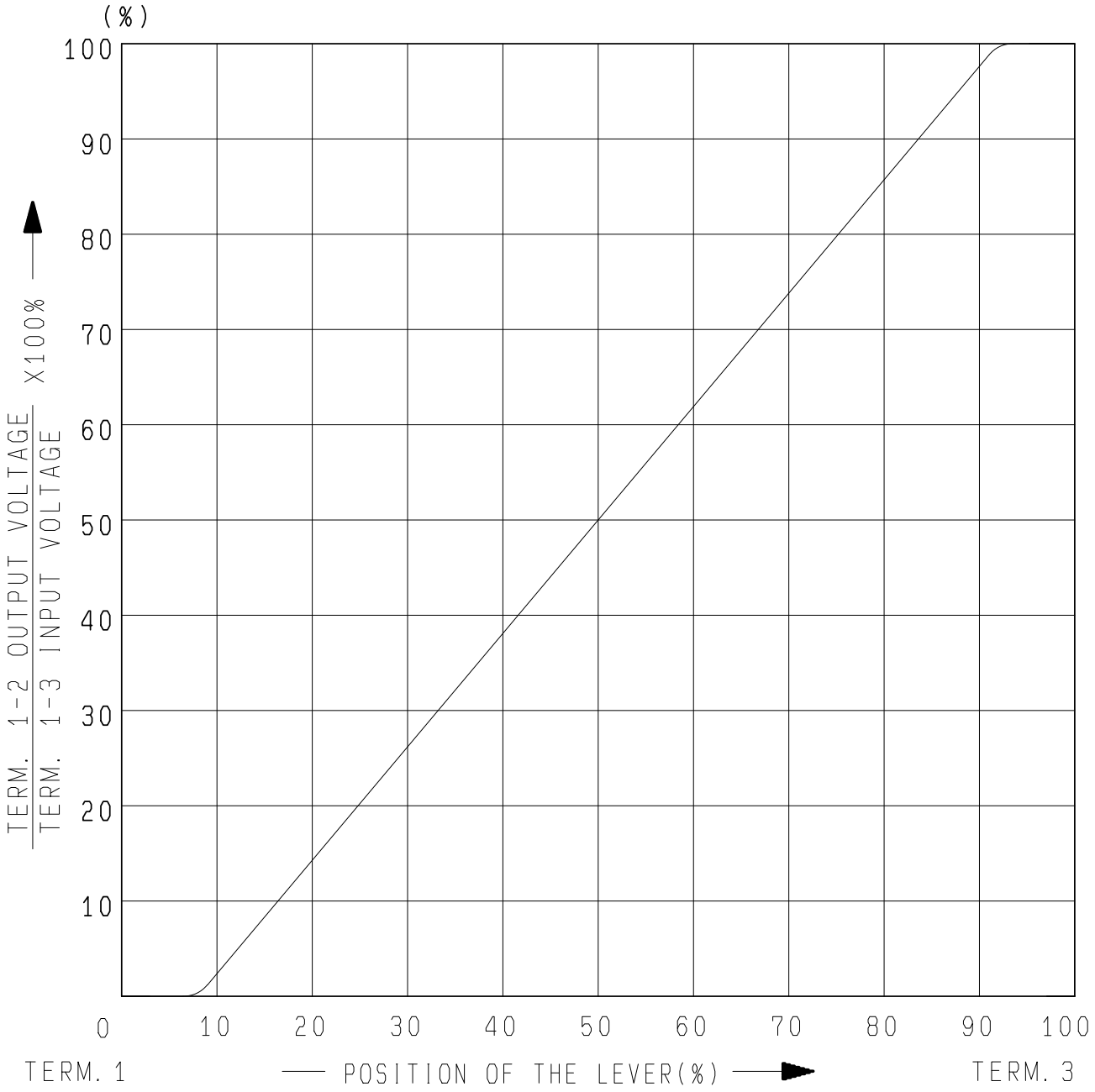

AT 50% TRAVEL FROM TERM. 1 VOLTAGE PERCENT SHALL FALL WITHIN THE LIMITS OF 40~60 PERCENT.

SYMB	DATE	APPD	CHKD	DSGD	APPD.	CHKD.	DSGD.	NAME 30mm TRAVEL TYPE B RESISTANCE TAPER
					Apr. 01. '96 S. Sasaki		Apr. 01. '96 K. Matsukawa	DOCUMENT NO. RS30H121A00B (3/3)

ご使用上の注意
PRECAUTION IN USE

1. 偏心ツマミをご使用になる場合
   レバーの中心より離れたところを作用点としてご使用になる場合、可能な限り
   下図A寸法を短くしてご使用下さい。
   If it will be used the operating point away from the center line of the lever, it should be shorter as possible.

2. レバー長さについて
   レバー長さについては、ツマミを含めて、下図B面より極力短いものを
   ご使用願います。レバー長さについては、作用点までの距離が短いほど
   しゅう動感触が良好となり、長いほど好ましくない感触になります。
   About the length of lever
   If conditions permit, it is advisable to use the shortest possible lever.
   The longer the length up to operating point, the more unfavorable slide feeling will be given.

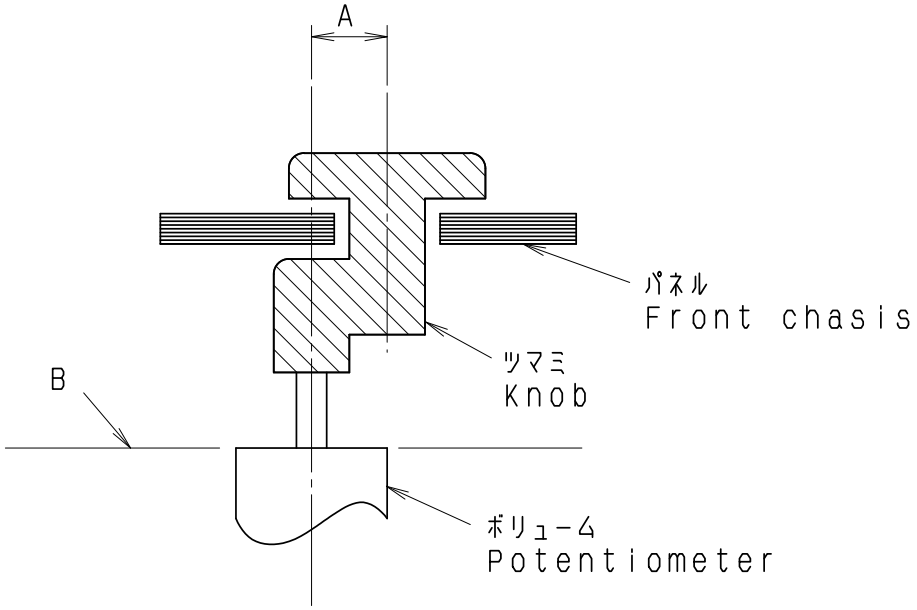

3. レバーの駆動に関しては上記内容を考慮の上、セット実装を行い
   あらかじめ異常のないことをご確認願います。
   Regarding the operation of the lever, please consider the above mentioned , and make sure nothing is wrong with the operation under installing in your appliance that you plan to use our products actually.

4. ツマミ挿入及びレバー操作は、ボリュームマウント基板に
   ソリ(曲がり)のない状態で行って下さい。
   Knob assembly on the lever and functioning the lever to be performed under the condition of P.C.B. without worp.

SYMB	DATE	APPD	CHKD	DSGD
ORIGINAL	'91-7-3	Y・Y	K・N	S・A

ALPSALPINE CO.,LTD.

APPD.	CHKD.	DSGD.
PD1-ENG1 '95.7.24 YOSIOKA	PD1-ENG1 '95.7.24 KIMURA	PD1-ENG1 '95.7.24 Y.SAITOH

TITLE スライドボリューム 仕様書 SPECIFICATIONS

DOCUMENT NO. 4S0001-200

RS30H121A00B

はんだ付け条件
FOLLOW THE NEXT CONDITIONS FOR SOLDERING

1. はんだ SOLDER
JIS Z 3282に規定のA30C5はんだを使用
A30C5 solder specified in JIS Z 3282.

2. 使用基板 BOARD IN USE
両面スルーホール基板又は、片面銅張積層板　板厚 t=1.6mm
Double-faces through-hole board or Single-face copper laid laminate board.
Plate thickness (t)=1.6mm

3. 自動はんだ<DIP条件>
(1)レバー位置　センター付近に設定願います。
(2)フラックス比重　0.83±0.01(発泡式)
(3)フラックス高さ　プリント基板の板厚の半分の位置にフラックスの上面が接するレベル(図1)
又、ボリューム挿入面への流れ込みのないこと。(フラックス上がり、飛散に注意)
(4)プリヒート温度 100°C max.時間1分以内.(プリント基板のボリューム挿入側の温度)
(5)はんだ温度　260°C max.時間5秒以内. はんだ回数は1回までとする。
IN THE CASE OF DIP SOLDERING
(1)State of potentiometer
Position a lever in the vicinity of center.
(2)Specific Gravity of Flux
0.83±0.01(foaming type)
(3)Height of Flux face
A level of the upper face of flux for reaching the position at a half of the plate thickness of printed board.(Fig.1)
Further, no flow of flux invading on the surface of printed board on the side of installing potentiometer is allowed.
(4)Preheat condition
100°C max.,within 1 minute
(Temperature on the side of installing printed board is designated.)
(5)Soldering condition
Solder temperature; 260°C max.
Soldering period ; within 5 seconds
Time of soldering ; only one time is permitted

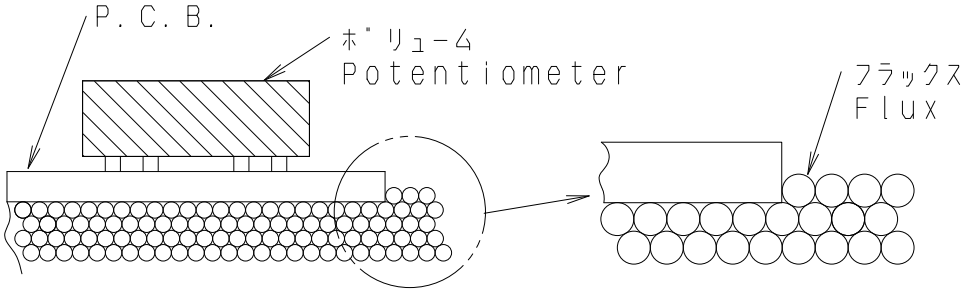

(Fig.1)

4. 手はんだ IN THE CASE OF MANUAL SOLDERING
はんだ温度　350°Cmax. 時間3秒以内 はんだ回数は1回までとする。
Solder temperature ; 350°C max.
Soldering period ; within 3 seconds
Time of soldering ; only one time is permitted

SYMB	DATE	APPD	CHKD	DSGD
ORIGINAL	'91-9-3	Y・Y	S・A	S・S

ALPSALPINE CO.,LTD.

APPD.	CHKD.	DSGD.
PD1-ENG1 '95.7.24 YOSIOKA	PD1-ENG1 '95.7.24 KIMURA	PD1-ENG1 '95.7.24 Y.SAITOH

TITLE スライドボリューム 仕様書 SPECIFICATIONS 1/2
DOCUMENT NO. 4S0001-201

5．注意事項

（１）はんだ付けの際に、端子にストレスを加えないで下さい。例えば、端子に熱を加えたまま製品を動かしますと、かしめカ゛タ及び電気的特性が劣化する恐れがあります。

（２）両面スルーホール基板を使用する場合は、ホ゛リューム挿入側の端子取付穴に、はんだラント゛がないようにご配慮願います。ホ゛リューム挿入側での配線が必要な場合は端子取付穴からの直接取り出しを避けスルーホール配線用の穴を設けるなどのご配慮をお願いします。

（３）ホ゛リューム挿入側へのはんだ上がりは、はんだ熱による端子接触不良の発生原因となりますので（図２）を参照願います。

（４）リート゛配線の場合、ホ゛リューム本体と、はんだ付け部の距離を１mm以上開けてはんだ付け願います。（図３）

（５）はんだ付けによるホ゛リュームへの影響は、プ゜リント基板の大きさ、ホ゛リュームの取付け位置、はんだ槽の大きさ、等により異なりますのであらかじめ実使用状態で実施し、異常のないことを確認の上、はんだ付けして下さい。

MATTERS TO BE NOTED

(1) Do not add any stress on terminals in the case of soldering. For instance, forced movement of potentiometer with terminals being heated may probably deteriorate the electric features due to generation of looseness in connection between resistant board and terminals.

(2) Avoid use of double-faces through-hole board as much as possible. If it is necessary to use it. Do not apply through-hole plating to a hole in which a potentiometer is inserted, and install a land to which terminals are soldered only on a face oppsite to the face on the side of installing potentiometer.

(3) Use caution to soldering process so as to prevent solder from rising up to the surface of printed board on the side of installing potentiometer, because defective contact may take place in terminal connecting part due to soldering heat .(Fig.2)

(4) In the case of lead wiring, solder it so that a gap of 1 mm or more may be reserved between the potentiometer body and soldering part.(Fig.3)

(5) The grade of influence of soldering exerted on the potentiometer depends upon the size of a printed board, installing position of the potentiometer, and the size of a solder bath etc. Therefore, make sure, in advance, of no abnomal state under the conditions of soldering to be carried our at present.

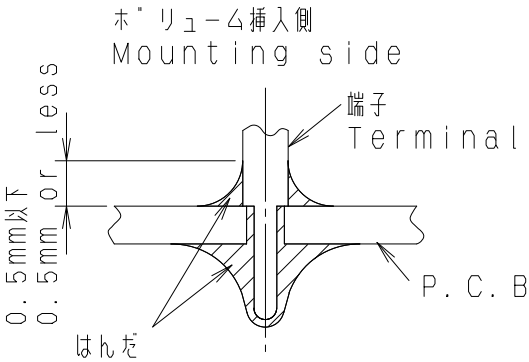

(Fig.2)

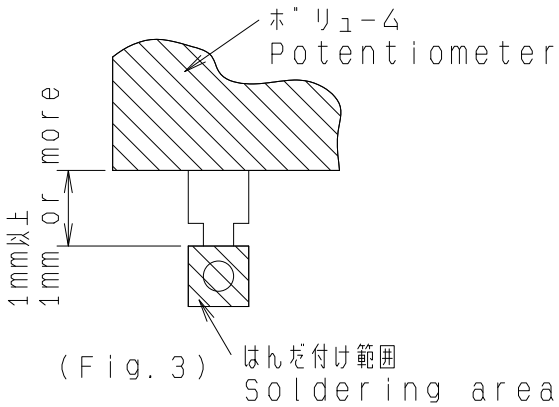

(Fig.3)

ORIGINAL	'91-9-3	Y・Y	S・A	S・S
SYMB	DATE	APPD	CHKD	DSGD

ALPSALPINE CO.,LTD.

APPD.	CHKD.	DSGD.
PD1-ENG1 '95.7.24 YOSIOKA	PD1-ENG1 '95.7.24 KIMURA	PD1-ENG1 '95.7.24 Y.SAITOH

TITLE スライト゛ホ゛リューム 仕様書 SPECIFICATIONS 2/2

DOCUMENT NO. 4S0001-201

RS15H1130B15

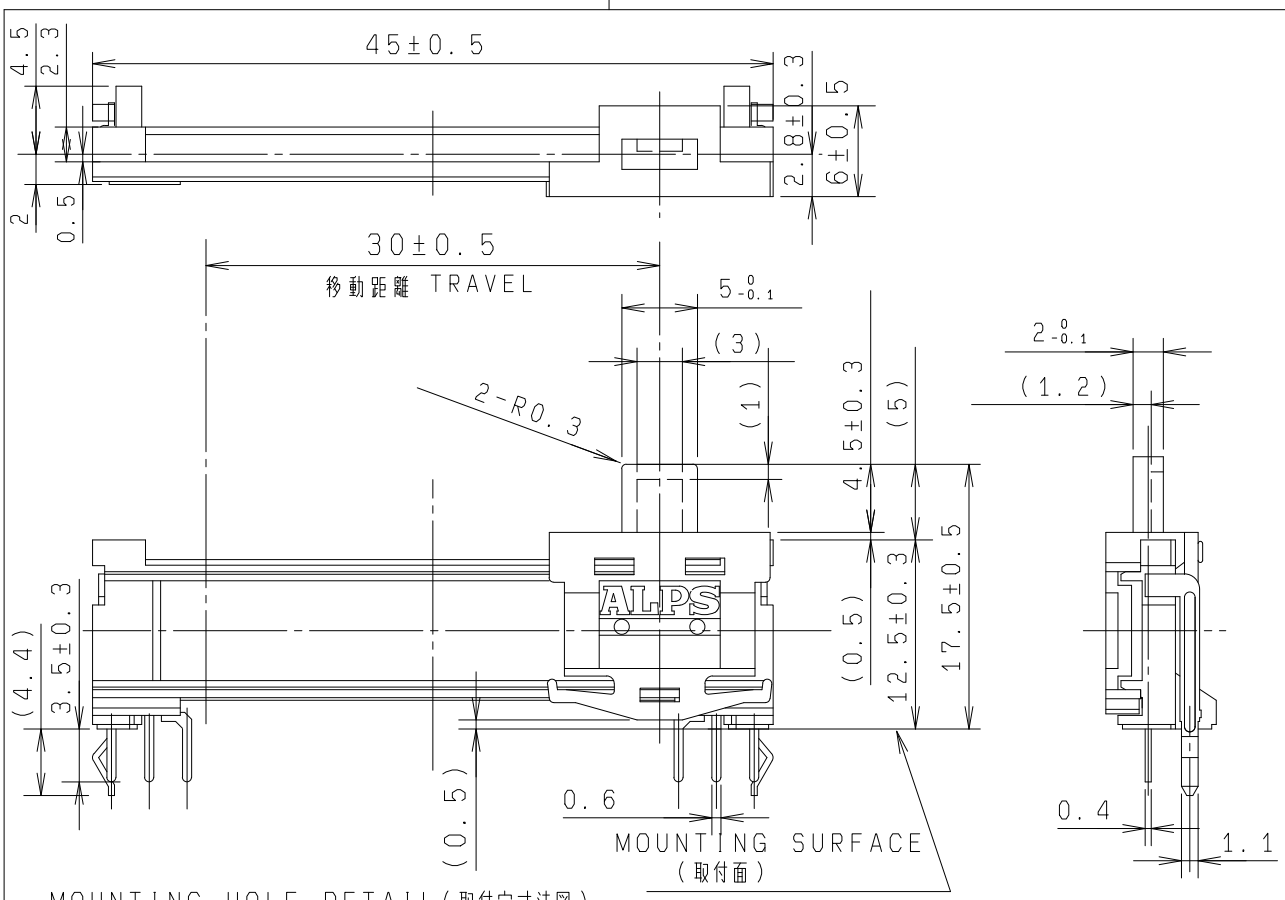

MOUNTING HOLE DETAIL(取付穴寸法図)

VIEWED FROM MOUNTING SIDE(挿入側より)

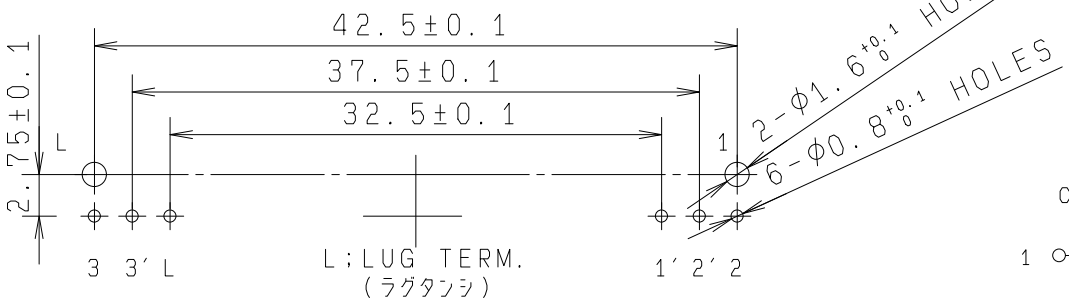

回路図

CIRCUIT

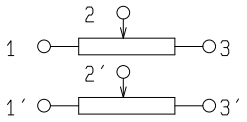

Note 1. Top side of knob shall be mounted to lever within 20mm length.
ツマミ長さは、レバー長さを含めて20mm以内でご使用願います。

指定なき部分の許容差 TOLERANCES UNLESS OTHERWISE SPEC	
L≦10	±0.3
10＜L＜100	±0.5
100≦L	±0.8
角度 ANGULAR DIMENSION	±5°

PART NO.	NAME	MATERIAL NAME / CODE	FINISH

SYMB	DATE	APPD	CHKD	DSGD

ALPSALPINE CO.,LTD.

DSGD. セツケイ Y, WATANABE '92-06-08	SCALE 2 :1	NO. RS30H121A0 RS30H121A00B
CHKD. K, SATOU '92-06-08		TITLE SLIDE POTENTIOMETER DUAL UNIT
APPD. Y, YOSHIOKA '92-06-08	UNIT mm	DOCUMENT NO. S2K-A112 S302KGA01