PRODUCT NO.	RoHS compliant
DSPV01LSGET	

REV.	ECN NO.	DR	DATE

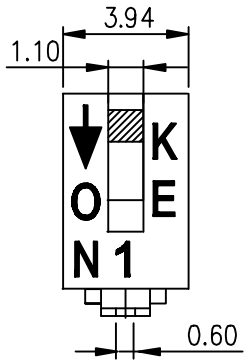

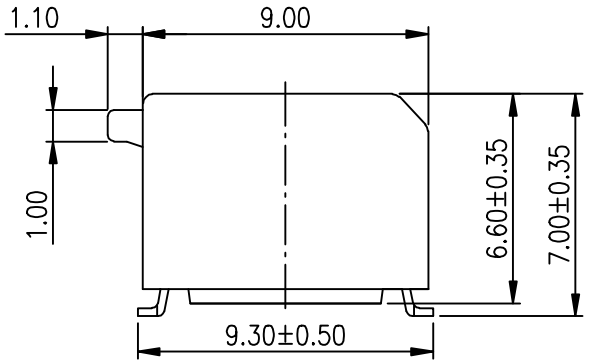

NOTES : 1.Specification:
1>.Operating force: 1000gf Max
2>.Operating Temperature: −40° to+85°
3>.Storage Temperature: : −40° to+85°
4>.Mechanical Life: 3000cycles minimum
5>Electrical Life: 2000cycles minimum

2. PLATING:
GOLD FLASH 1u"~2u" SOLDERTAIL,
1u"~3u"GOLD PLATING ON THE CONTACT AREA,
WITH 50u" NICKEL UNDERPLATINGOVERALL.

3. CONTACT RATING:
1.SWITCHING: 25mA at 24VDC
2.NON−SWITCHING: 100mA at 50VDC
WITH 50u" NICKEL UNDERPLATINGOVERALL.

4. PART NUMBER DESCRIPTION :

DS PV L S G E T

- T — [Packing:T=Tube R=Reel]
- E — [Finish: E=1u"~3u" Gold−plated]
- G — [Finish: G=Full Gold S=Contat-Gold-plated]
- S — [Terminal:S=SMD type H=Straight.....]
- L — [Actuator:T=Tape sealed S=Low profile W/O Tape L=Extension]
- PV — [HP=Half−Pitch IC=IC type PV=Piano type]

[Schematic]

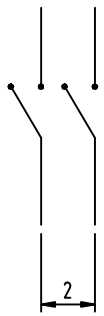

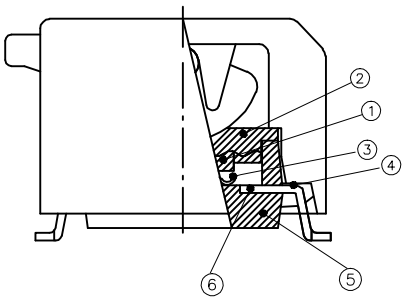

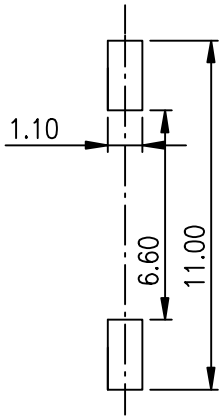

RECOMMENDED P.C.B. LAYOUT (TOP VIEW)

Number	Part Name	Material	Finished
①	Actuator	UL94 V0	White
②	Cover	UL94 V0	Black
③	Movable	Copper Alloy	1u"~3u" Gold
④	Terminal	Brass	1u"~2u" Gold
⑤	Base	UL94 V0	Black
⑥	Terminal Contact	Brass	1u"~3u" Gold

TOLERANCE UNLESS OTHERWISE SPECIFIED		INSPECTION
LINER	ANGLES	COPY
.0 ± 0.25	0. ± 2°	PROJECTION
.00 ± 0.15	.0 ± 1°	
.000± 0.10	.00± 0.5°	
DESIGN	kathy	03/20/12'
DRAWING		
CHECK		
APPRO.		

东莞市广督实业有限公司
DongGuan Kingtek Industrial Co., Ltd.

TITLE
BY DSPV SERIES PITCH 2.54mm

PRODUCT FAMILY DSPV SERIES

PRAT NO. DSPV01LSGET

FILE NO. DSPV01LSGET-A

SIZE	UNIT	SCALE	SHEET	REV.
A4	mm	2 : 1	1 OF 1	A